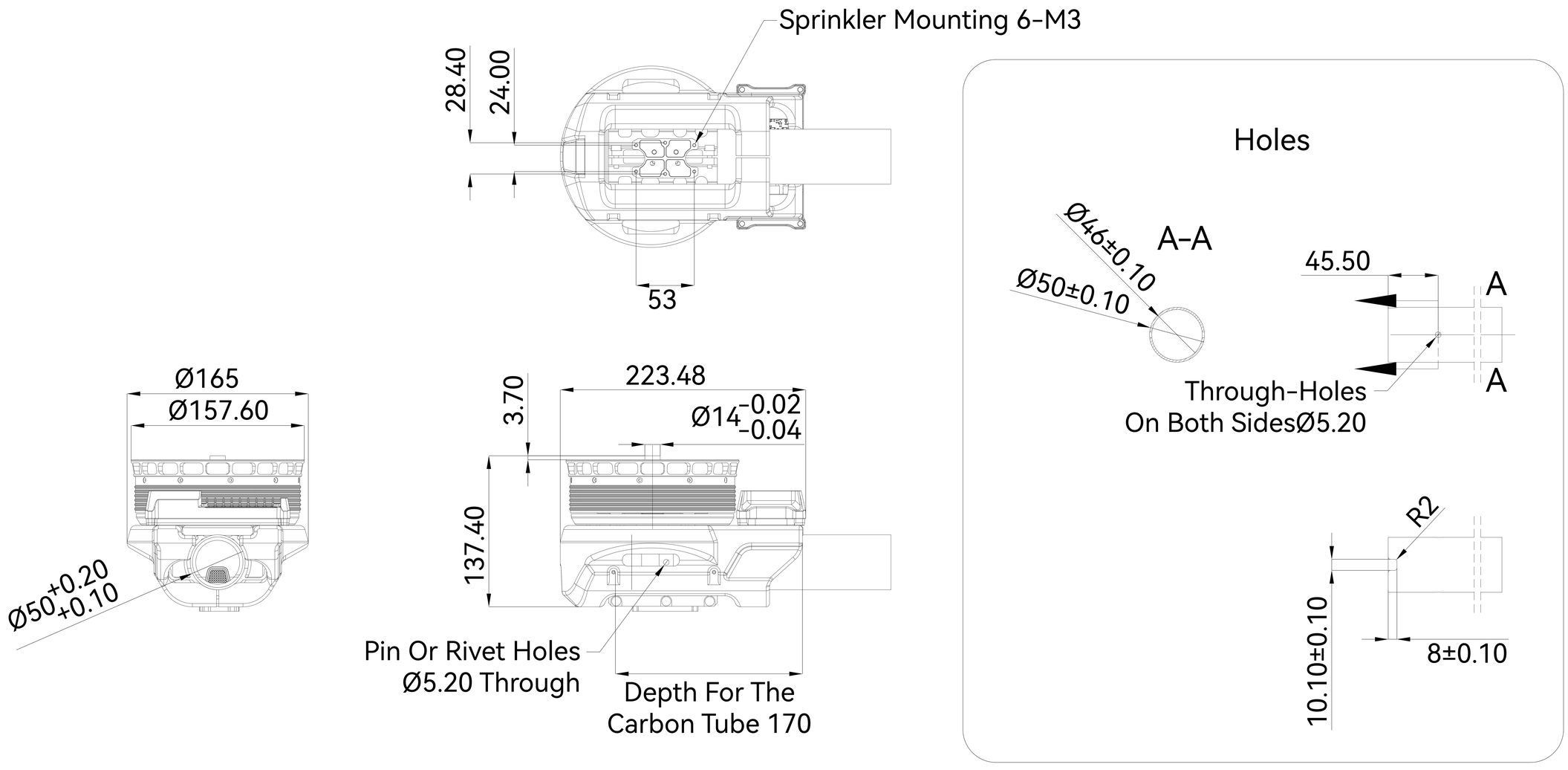

56 Inch Propeller 1424

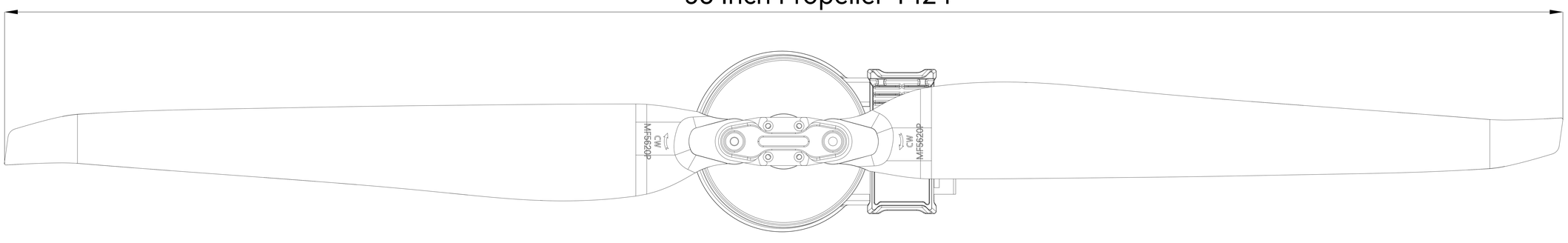

Unit: mm